Design options for proximity probe applications

COPY COMPLIANT to the original document resident on the computer system at the time of printing

Index

1. SCOPE AND FIELD OF APPLICATION 3
2. ACRONYMS 3
3. BASIC KNOWLEDGE 3
4. INTERNATIONAL STANDARD REQUIREMENTS. 3
4.1. API 610 12th: Rotors (§6.6). 3
4.2. API 670 5th Ed: Sensor transducer arrangements (§6). 4
4.2.1. Radial probe position (§6.1.2). 4
5. PROTECTION OF SHAFT PROBE AREAS 8
6. REFERENCES 9
7. ANNEX A: SPECIAL COATINGS 10
8. ANNEX B: WS 2714 TECHNICAL BULLETIN 14
9. ANNEX B: WS 2718 TECHNICAL BULLETIN 15

COPY COMPLIANT to the original document resident on the computer system at the time of printing

1. SCOPE AND FIELD OF APPLICATION

This document defines the guidelines for machinery protection system (MPS) measuring radial shaft vibration and shaft axial position.

The procedure is applicable for the Nova Milanese and La Spezia plants.

2. ACRONYMS

gauss level the magnetic field level of a component (it is best measured with a Hall effect probe)

MPS machinery protection system

pp peak-to-peak amplitude

Ra surface roughness [µm]

3. BASIC KNOWLEDGE

Implementing shaft protection probes, such as proximity probes, involves several key steps to ensure accurate monitoring and protection of rotating machinery:

a) selection of probes;
b) mounting;
c) installation (e.g., gap setting, alignment, calibration, etc…);
d) wiring/connections;
e) testing/validation;
f) maintenance.

This document describes requirements for the correct mounting of proximity probes both for axial and radial monitoring.

4. INTERNATIONAL STANDARD REQUIREMENTS.

4.1. API 610 12th: Rotors (§6.6).

If non-contacting shaft vibration probes are furnished in accordance with 7.5.2.2, the shaft sensing areas (both radial vibration and axial position) for observation by radial vibration probes shall:

a) be concentric with the bearing journals;
b) be free from stencil and scribe marks or any other surface discontinuity, such as an oil hole or a keyway, for a minimum distance of one probe tip diameter on each side of the probe;

COPY COMPLIANT to the original document resident on the computer system at the time of printing

c) not be metallized, sleeved, or plated on rotors made of materials that exhibit consistent electrical properties;

d) have a final surface finish of 0.8 µm. (32 µin) *Ra* or smoother, preferably obtained by honing or burnishing;

e) be properly demagnetized to the levels specified in API 670, or otherwise treated so that the combined total electrical and mechanical runout does not exceed the following:

1. for areas observed by radial vibration probes, 25 % of the allowed peak-to-peak vibration amplitude or 6 µm (0.25 mil), whichever is greater;
2. for areas to be observed by axial position probes, 13 µm (0.5 mil).

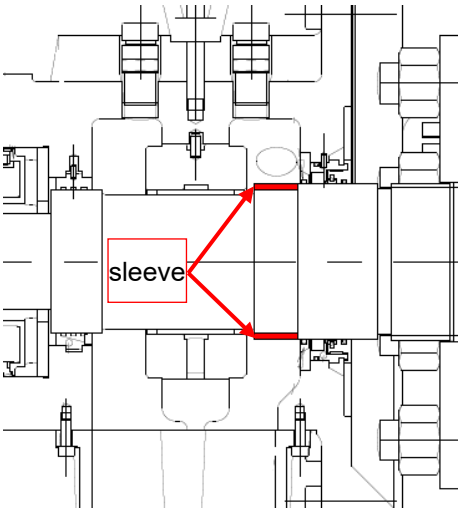

Figure 1 Shaft (shrink fitted) sleeves.

If the shaft is made of material that exhibits inconsistent electrical properties, the shaft-sensing areas may be produced by shrink-fitting sleeves or target rings on the shaft. Target rings shall be finished in accordance to previous indications and shall be identified in the technical documentation. Materials known to exhibit inconsistent electrical properties are high-chromium alloys such as 17-4 PH, duplex stainless steel, and many austenitic stainless steels.

If provisions for mounting non-contacting shaft vibration probes are specified, the shaft shall be prepared in accordance with the requirements of §6.6.10 and API 670.

If non-contacting shaft vibration probes are furnished, accurate records of electrical and mechanical runout for the full 360° at each probe location shall be included in the mechanical test report. Electrical and mechanical runout records shall be phase referenced to a permanent location on the shaft such as a key slot.

4.2. API 670 5th Ed: Sensor transducer arrangements (§6).

4.2.1. Radial probe position (§6.1.2).

For monitored radial bearings, two radially oriented proximity probes shall be provided. These two probes shall be:

a) coplanar, 90° (±5°) apart and perpendicular to the shaft axis (±5°)[1];

[1] Typically the shaft radial proximity probes are located 45°(±5°) from each side of the vertical center.

COPY COMPLIANT to the original document resident on the computer system at the time of printing

b) referenced such that when viewed from the driver end of the machine train, the Y (vertical) probe is on the left side of the vertical center, and the X (horizontal) probe is on the right side of the vertical center regardless of the direction of shaft rotation (Figure 2);

c) located within 75 mm (3 in) of the bearing;

d) located the same with respect to the predicted nodal points as determined by a rotordynamic analysis of the shaft's lateral motion (e.g. both sets of probes shall be either inside or outside the nodal points) (refer to *API 684, API Standard Paragraphs Rotordynamic Tutorial: Lateral Critical Speeds, Unbalance Response, Stability, Train Torsionals, and Rotor Balancing*);

e) located such that they do not coincide with a predicted nodal point.

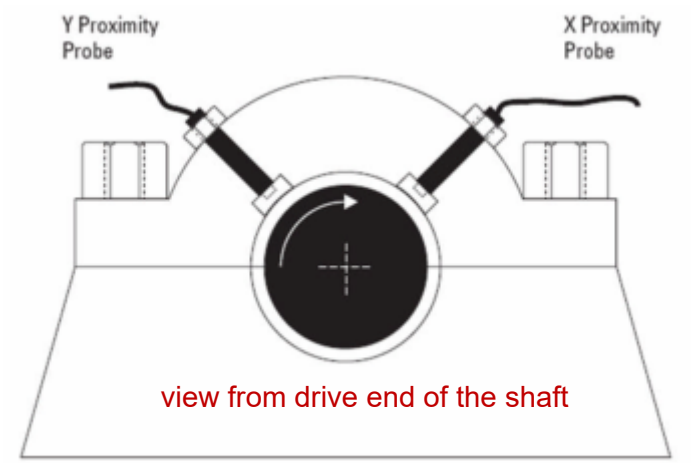

Figure 2 Probe position.

The surface areas to be observed by the probes (probe areas):

a) shall be free from stencil and scribe marks or any other mechanical discontinuity, such as an oil hole or a keyway;

b) shall not be metalized or plated;

c) shall have a final surface finish that does not exceed (be rougher than) 1 µm (32 µin.) rms, preferably obtained by diamond burnishing[2];

[2] Diamond burnishing with a tool-post-held, spring-mounted diamond is common. In addition to use in reducing mechanical runout, it has also proven to be effective for electric runout reduction

COPY COMPLIANT to the original document resident on the computer system at the time of printing

d) shall be properly demagnetized[3] or otherwise treated so that the combined total electrical and mechanical runout does not exceed 25 % of the maximum allowed peak-to-peak vibration amplitude or 6 µm (0.25 mil), whichever is greater.

For all conditions of rotor axial float and thermal expansion, a minimum side clearance of one-half the diameter of the probe tip is required. The probe shall not be affected by any metal other than that of the probe's observed area (Figure 3).

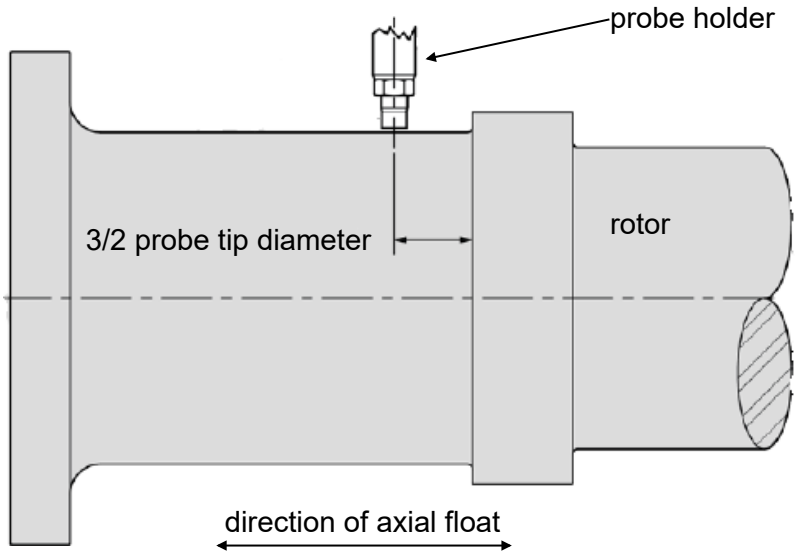

Figure 3 Side Clearance for radial vibration probes.

Unless otherwise specified, the probe gap shall be set at –10 Vdc (±0.2 Vdc).

Two axially oriented probes shall be supplied for the thrust bearing end of each casing. Both probes shall sense the shaft itself or an integral axial surface installed within an axial distance of 300 mm (12 in.) from the thrust bearing or bearings (see Figure 12).

[3] Final finishing or light surface-removal finishing by grinding will normally require follow-up demagnetization. The gauss level of the proximity probe area should not exceed 2 gauss. The variation of gauss level around the circumference of the proximity probe area should not exceed 1 gauss.

COPY COMPLIANT to the original document resident on the computer system at the time of printing

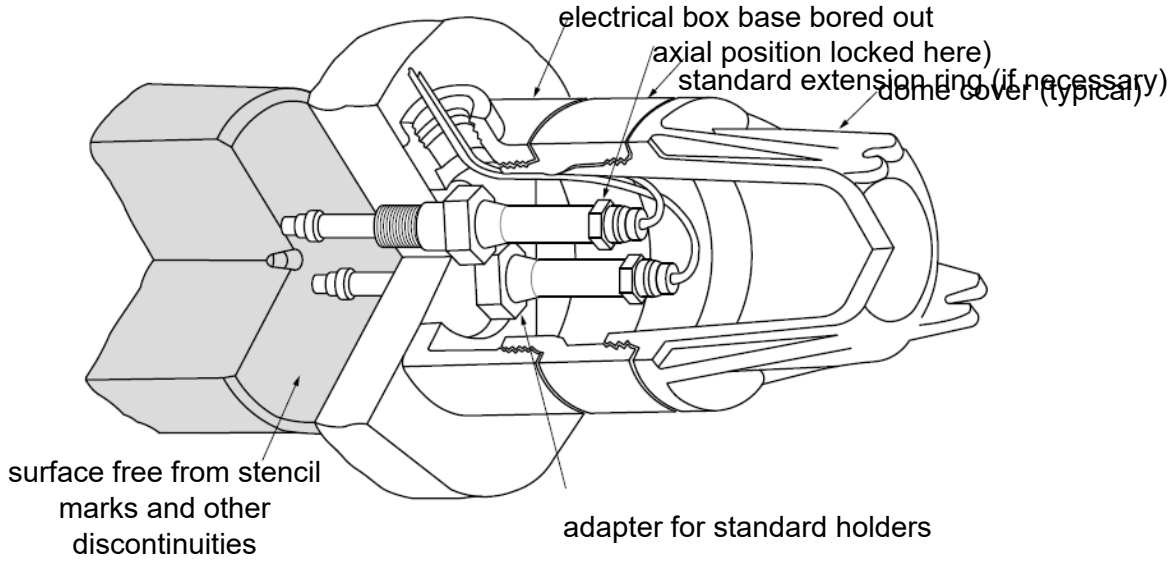

Figure 4 Standard axial probe arrangement.

If specified, the standard optional arrangement shall be one probe sensing the shaft end and one probe sensing an integral thrust collar[4].

It shall be possible to adjust the probe gap using commercially available wrenches. No special bent or split socket wrenches shall be required.

The electrical box shall protect the axial probe assembly so that external loads (e.g. those resulting from personnel stepping on the box) do not impose stress on the assembly and result in false shaft-position indication (Figure 4).

[4] When choosing the locations for all probes used in direct shaft measurements, it is always more desirable to measure the shaft directly rather than a component attached to the shaft. When choosing a location that measures a component attached to the shaft, the component may shift or loosen causing a loss of measurement and possible machine damage.

COPY COMPLIANT to the original document resident on the computer system at the time of printing

5. PROTECTION OF SHAFT PROBE AREAS

The term “GLITCH” is Bently Nevada Corporation’s nomenclature for describing all forms of vibration measurement error from an observed shaft surface. This does not include other possible noise and signal error sources, such as electrical line noise, monitor problems, or problems associated with casing mounted transducers. Casing mounted transducers, such as velocity coils or accelerometers are also subject to signal error sources in the form of cross axis vibrations, improper mountings, line noise as well as several others particular to each type of transducer; however, glitch deals with observed shaft surface anomalies only.

The removal of glitch by surface treatments is essential for customer acceptance of levels of recorded vibration. Having treated the probe areas, **it is critical to protect these areas to prevent corrosion damage, scratching and indiscriminate “cleaning up”**.

During production and testing, this protection is afforded by the care taken by skilled craftsmen who appreciate the sensitive nature of this surface. It is possible to define three main rules:

- educate craft about the areas;
- cover with rubber (thickness from 3 mm to 6 mm);
- prevent dropping tool and objects.

There have been many field reports of probe areas being damaged by rust, scratches or dents. Cleaning up the damage by stoning or polishing may give the desired appearance, but the original glitch recordings will have been completely altered and undoubtedly taken beyond acceptable limits. Glitch removal then has to be carried out in the field by selective micropeening, and considering the adverse conditions, the results are invariably inferior to those which can be achieved in the shop.

A possible solution to this problem can be that after glitch treatment and recordings are taken in the shop, the probe areas be given a coating of non-metallic epoxy resin which can remain in position for the life of the machine. This coating will not affect probe readings but will protect the probe area from corrosion and all minor mechanical damage.

COPY COMPLIANT to the original document resident on the computer system at the time of printing

6. REFERENCES

- *API Standard 610 12th edition, January 2021*
- *API Standard 670 5th edition, November 2014*
- *API Publication 684 1st edition, February 1996*
- *Nathan Littrell – The color of runout*
- *3300 XL 8 mm Proximity Transducer System Datasheet*
- *SOP-093 Rev.2 - ITA - Procedura per eliminazione magnetismo residuo con Diamond Burnishing*

COPY COMPLIANT to the original document resident on the computer system at the time of printing

7. ANNEX A: SPECIAL COATINGS

Although, for shaft whose material has inconsistent electrical properties API 610 and API 670 do not allow the use of coatings and prescribe the use of shrink-fitting sleeves or target rings, special coating has been successfully employed in the past.

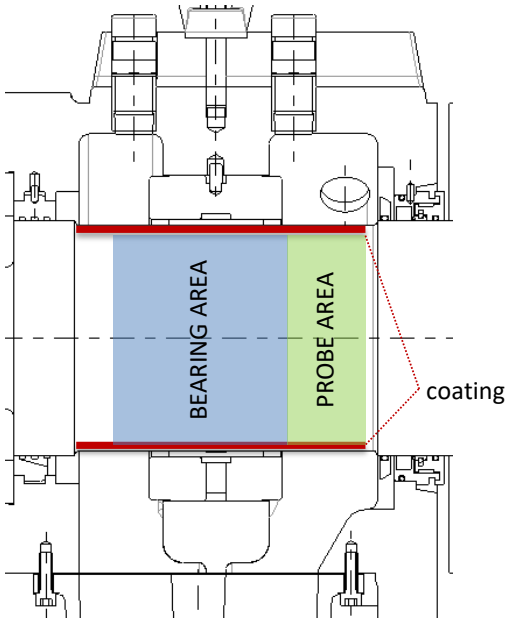

Figure 5 NDE bearing.

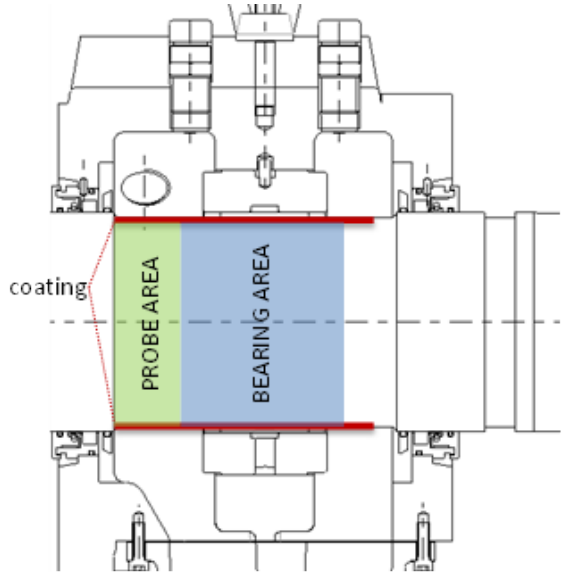

Figure 6 DE bearing.

Commonly known problematic materials include[5]:

- UNS 32760 (super Duplex Stainless Steel);
- UNS 31803 (Duplex Stainless Steel);
- AISI 316L;
- UNS S20910 Nitronic 50;
- Nickel based alloys.

M819 (Table 1), WS-2718 (8) or WH-2714 coatings are capable of eliminating the inaccuracies caused by shaft material selection: their properties are such that standard proximity probes for AISI 4140 (most manufacturer standard calibrated material, as per API 670) can be used; no other changes in the measurement chain are required.

[5] Manufacturer experience is based only on duplex stainless steel.

COPY COMPLIANT to the original document resident on the computer system at the time of printing

The probe and bearing areas on the shaft must be coated with a specific material that avoid inconsistent electro-magnetic properties and with adequate thickness so that it can be used to filter all anomalies of the core material. The hardness and chemical composition of the coating makes it also suitable to operate under the radial bearing sleeve, avoiding shaft damages in case of hard contacts and ensuring protection against *wire wooling*[6].

Table 1 Material properties.

name	M819
coating manufacturer	Praxair
chemical composition	Fe-based
hardness	greater than 380 HB
adhesion to shaft	greater than 20 MPa
deposition method	air wire

To minimize mechanical run out, the bearing and target area is finished by very fine grinding in a single machine set up, so that concentricity of target area and bearing surfaces (adjacent) is easily maintained to extremely low values.

The thickness of the coating in the sensing position must be at least between 1 to 1.5mm to guarantee that the area is not affected by non-uniform magnetic/electric properties of the shaft material but only by coating itself.

It shall be noted that the deposition methods by “air wire” or “spray Wire” allow very dense and very high bonding strength to the core material.

The thickness of the layer can be of some mm, which is very high compared to that obtained using HVOF techniques (less than 1mm). Table 2 summarizes the suggested coating combinations for different shaft materials.

Table 2 Material combinations.

shaft material	electro-magnetic properties	coating (bearing areas)	coating (probe areas)

[6] This failure occurs when a small particle of hard dirt or debris gets embedded in the bearing material but continues to rub against the steel counter face. At high speed the temperature generated by the frictional rub carburizes the chromium in the steel in the presence of a hydrocarbon oil, producing hard chromium carbides that embed in the soft bearing material and act as cutting tools on the journal or thrust collar. The process continues by accretion of the embedded carbides and may result in a journal being turned completely through.

COPY COMPLIANT to the original document resident on the computer system at the time of printing

410 (12%Cr steel)	consistent	chrome oxyde	none
4140	consistent	chrome oxyde	none
316	not consistent	M819 WS-2718 WH-2714	M819 WS-2718 WH-2714
Duplex (UNS 31803)	not consistent	M819 WS--2718 WH-2714	M819 WS-2718 WH-2714
Super Duplex (UNS32760)	not consistent	M819 WS-2718 WH-2714	M819 WS-2718 WH-2714
XM-19 (Nitronic)	not consistent	M819 WS-2718 WH-2714	M819 WS-2718 WH-2714
17 -4 PH	not consistent	M819 WS-2718 WH-2714	M819 WS-2718 WH-2714

In accordance with Figure 3, a minimum side clearance of one-half the diameter of the probe tip *d* is required. Consequently, the probe area length must be at least three times *d*, with the probe positioned at the centre. Always check if probe manufacturer IOM is in compliance with this specification: if not, the drawing of the sensing area must be in compliance with probe manufacturer specification.

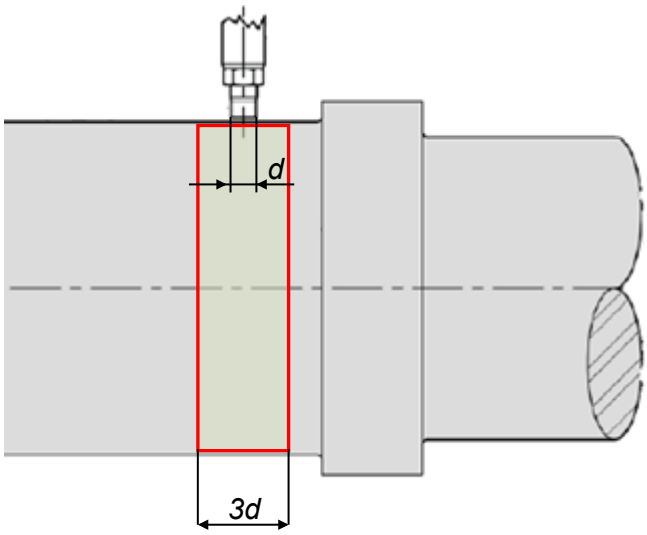

Figure 7 Probe area length.

COPY COMPLIANT to the original document resident on the computer system at the time of printing

8. ANNEX B: WS 2714 TECHNICAL BULLETIN

Introduction

WH2714 is a Thermal Spray qualified process for carbon steel coating. It's a low-shrink material which permits application of coatings with very high thickness and, thanks to its superior shrink characteristics, it's ideal for applications finished by grinding.

In this process, the parameters have been optimized in order to get lower coating porosity and higher density.

Typical Chemical Composition

- Manganese <3%
- Nickel <5%
- Carbon <0,1%
- Iron balance

Technological properties

- High thickness coating applicable
- Very good machinability

Typical mechanical properties

- Micro-hardness 250-350 $HV_{0,3}$
- Porosity <5%
- Tensile strength > 20 MPa

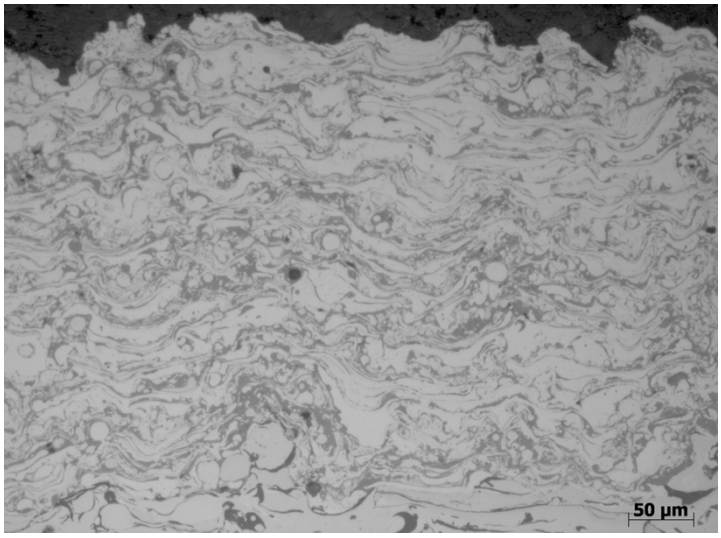

typical microstructure

Applications

- Dimensional restorations of mechanical components.
- Ideal for components where the coatings must be machined.
- Ideal for components where it's required high coating thickness.
- Armature shafts.
- All kinds of journal surfaces.
- For repairing mis-machined parts.

COPY COMPLIANT to the original document resident on the computer system at the time of printing

9. ANNEX B: WS 2718 TECHNICAL BULLETIN

Introduction

WS-2718 is a Flame Spray Carbon steel coating applied by wire spray. The coating applied is mechanically bonded to the base material so is independent from the chemical composition of the base material itself. Low application temperature doesn't generate cracks or alterations in the microstructure of the base material.

WS-2718 can be applied on complex geometries, generating a small transition zone between coated and uncoated areas. WS-2718 coating is suggested for mechanical restoration and repair of weared parts, producing a coating with higher hardness and lower shrinkage.

Typical Chemical Composition

- Iron balance
- Manganese 0,8%
- Carbon 0,8%

Technological properties

- Wear resistance excellent
- High thickness coating applicable
- Low shrinkage

Typical mechanical properties

- Micro-hardness 500 $HV_{0,3}$
- Porosity <5%
- Tensile strength > 20 MPa

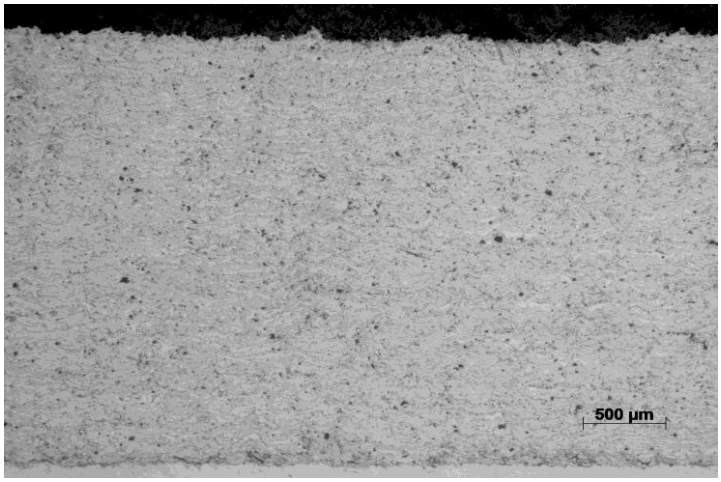

typical microstructure

Applications

- Use where a hard, low-shrink steel coating is required
- Ideal for high coating thickness due to low thermal shrinkage
- Journal surfaces
- Plunger shafts
- Seal rings
- Cylinder liners

COPY COMPLIANT to the original document resident on the computer system at the time of printing